BOX-HCH-102 HD/SD to HDMI Converter

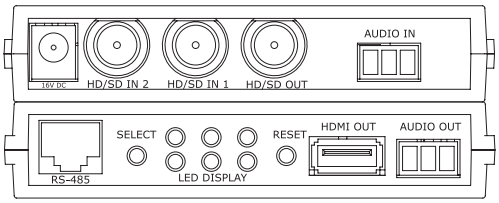

DESCRIPTION

BOX-HCH-102 is a HD/SD to HDMI signal converter. It supports 2 channels HD/SD inputs, and selects one of them to convert to HDMI signal output. HCH-102 supports a group of monitoring audio output. HDMI signal can be overlaid with audio meter, TALLY indicator and UMD(under monitor display). HCH-102 ensures the compatibility of HD/SD signal and HDMI display equipment. Their combination not only greatly lowers the cost of video display system but also adds the flexibility of usage. It supports TSL's UMD protocol.

BOX-HCH-102 is ideal for Studio, Monitoring, Video Conference and Multi-media, etc.

BLOCK DIAGRAM

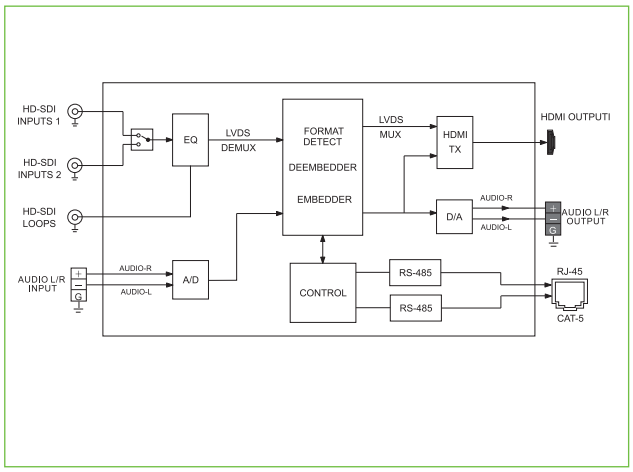

SYSTEM CONNECTION DIAGRAM

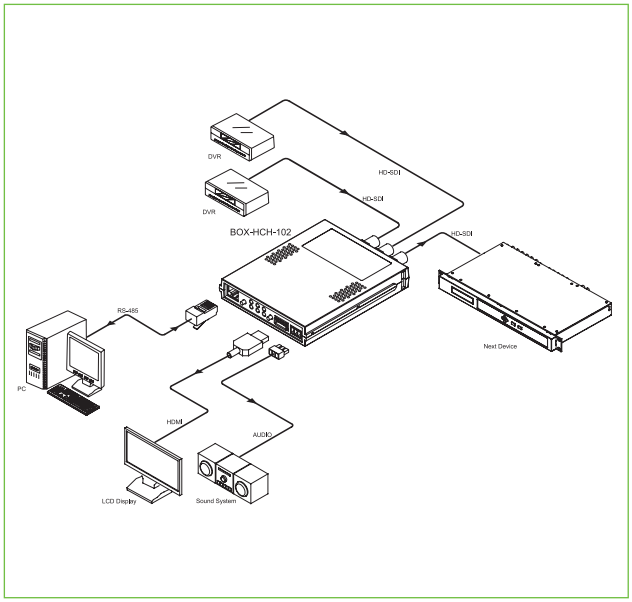

SPECIFICATIONS

Mechanical
Width.....3.86 in. (98mm)
Height.....0.79 in. (20mm)
Depth.....4.72 in. (120mm)

Electrical
Power Consumption.....4W
Power Supply.....16VDC power supply adapter

Environmental
Operating Temperature.....32°F~104°F (0°C~40°C)
Relative Humidity.....10%~90%

Input Specifications
Connector.....BNC(×2)
Signal Format.....SDI SMPTE-259M C 525/625 component

Video Output Specifications
Connector.....HDMI(×1) BNC(×1)
Signal Format.....HDMI(resolution up to 1920×1080i)
HD/SD(loop-thru output)
Audio Meter.....VU meter + PPM meter display

Audio Output Specifications
Connector.....3Pin(×1)
Signal Format.....Unbalanced analog audio stereo

RS-485 Control Signal Output Specifications
Connector.....RJ-45(×1)
Signal Output.....Dual RS-485 signals

ORDERING INFORMATION

◆ Standard Accessories

Model	Product Description
BOX-HCH-102	HD/SD tO HDMI Converter
BOX-PWR	Power Supply Adapter
BOX-HOLDER	HOLDER
381-3P	3Pin Connector

◆ Optional Accessories

Model	Product Description
BOX-FM-1RU	BOX Series Rack Equipment (can accomodate at most eight 1RU/2RU high function modules)
BOX-PWD	1×6 Power Supply Distribution Module (power at most six function modules)