ADA-1003

Dual 1×4/Single 1×8 Gain Controllable Analog Audio Distribution Amplifier

The ADA-1003 is a dual 1×4/single 1×8 gain controllable analog audio distribution amplifier (DA). It is used in i-MOD platform. The module supports either a dual-channel DA with 4 analog audio outputs for 1 analog audio input on each channel; or single-channel DA with 8 analog audio outputs for 1 analog audio input. Each first output supports power-off protection. Thus signal can be output continuously when module is removed or power is off.

The ADA-1003 can be controlled locally by means of an intuitive card-edge interface or remotely using i-MOD platform control software IM-MASTER.

FEATURES

- Dual 1×4 or single 1×8 distribution mode
- Gain ranges from -6 dB to + 27 dB
- The first output is power-off protected
- Excellent output isolation and crosstalk rejection
- Non-volatile memory
- Hot-swappable
- IM-MASTER control supported

BLOCK DIAGRAM

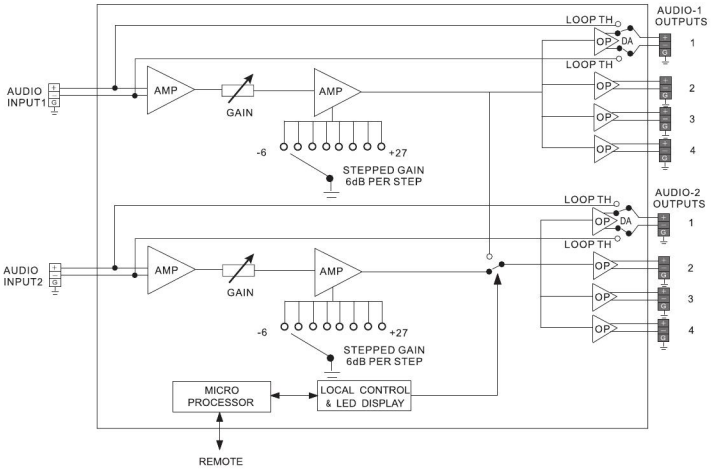

BACK MODULES

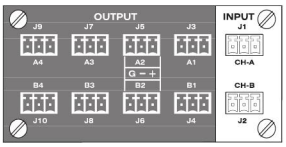

1RU

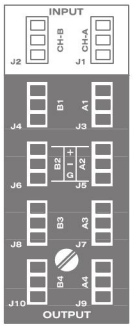

2RU

SPECIFICATIONS

Specifications are subject to change without notice.

INPUT

Signal Format.....Balanced analog audio
Connector.....3Pin (×1) or 3Pin (×2)
Impedance.....>20 kΩ
Common Mode Range.....±10 V
Common Rejection Ratio.....>90 dB @ 60 Hz
>60 dB @ 20 kHz

OUTPUT

Signal Format.....Balanced analog audio
Connector.....3Pin (×8) or 3Pin (×4×2)
Impedance.....33 Ω

PERFORMANCE

Gain Range.....-6 dB ~ +27 dB
THD.....<0.02%, 20 Hz ~ 20 kHz
relative to 1 kHz
THD+N.....<0.05%
Frequency Response.....±0.25 dB, 20 Hz ~ 20 kHz

ELECTRICAL

Power.....3 W

ENVIRONMENTAL

Operating Temperature.....32° ~ 104° F (0° ~ 40° C)
Relative Humidity.....10% ~ 90%