SDA-1101 Dual 1×4 SDI/ASI Distribution Amplifier

The SDA-1101 is a dual 1×4 SDI/ASI distribution amplifier (DA). It is used in i-MOD platform. The module provides a dual-channel DA with 4 SDI/ASI outputs for 1 input on each channel. Each first output supports power-off protection. Thus signal can be output continuously when module is removed or power is off.

The SDA-1101 can be controlled locally by means of an intuitive card-edge interface or remotely using i-MOD platform control software IM-MASTER.

FEATURES

- Dual 1×4 distribution mode
- Supports DVB-ASI, SMPTE 259M A , B , C , D (143, 177, 270, 360 Mbps) signal and digital signal from 10 to 540 Mbps
- Each first output is power-off protected
- Non-volatile memory
- Hot-swappable
- IM-MASTER control supported

BLOCK DIAGRAM

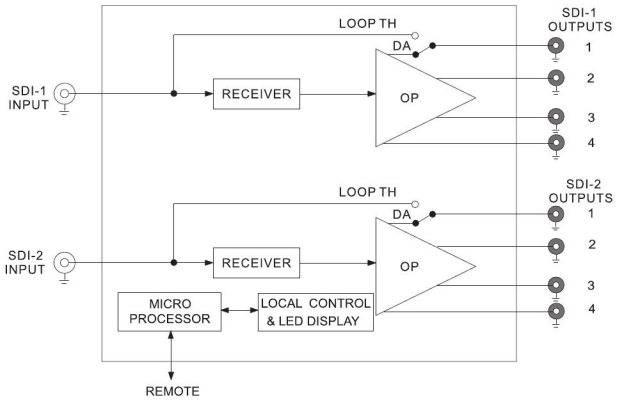

BACK MODULES

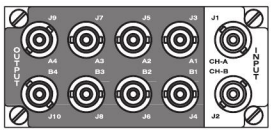

1RU

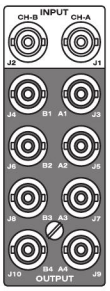

2RU

SPECIFICATIONS

Specifications are subject to change without notice.

INPUT

Signal Format.....SMPTE 259M, DVB-ASI
Connector.....BNC (×2)
Impedance.....75 Ω
Return Loss.....>15 dB @ 270 MHz

OUTPUT

Signal Format.....SMPTE 259M, DVB-ASI
Connector.....BNC (×4×2)
Impedance.....75 Ω
Return Loss.....>18 dB @ 270 MHz
>15 dB @ 360 MHz
Amplitude.....800 mVp-p ±10%

PERFORMANCE

Jitter.....<0.2 UI
Overshoot.....<10% of amplitude
Rise/Fall Time.....400 ~ 1500 ps,
20% ~ 80% of amplitude
Rise/Fall Time Diff.....<500 ps

ELECTRICAL

Power.....2 W

ENVIRONMENTAL

Operating Temperature.....32° ~ 104° F (0° ~ 40° C)
Relative Humidity.....10% ~ 90%